Head Office :
504 Hanaro Plaza, 2033 Daehwa-Dong, Ilsan-Ku, Koyang-Si, Kyungki-Do, Korea/TEL:(031)917-8351~3/FAX:(031)917-8355/E-mail:info@ujin-led.co.kr
Overseas Factory: Plot #61, Sector #7, Expor Processing Zone, Chitagong, Bangladesh / TEL:(031)740050/FAX:(031)740038/E-mail:ujinbd@spnetctg.com

ULP-□02A

Unit : mm
Tolerance : ±0.25
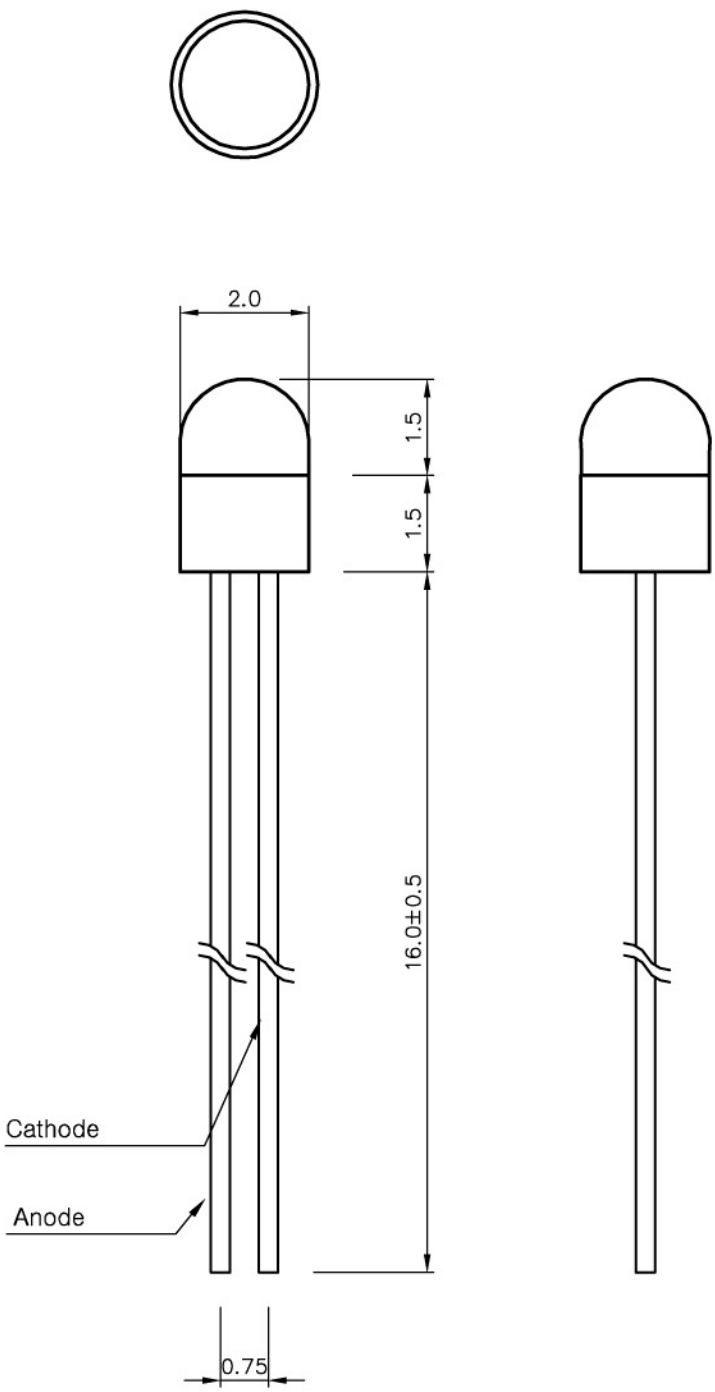
■ Outline Dimensions