# U-JIN®

**Head Office :**
504 Hanaro Plaza, 2033 Daehwa-Dong, Ilsan-Ku, Koyang-Si, Kyungki-Do, Korea/TEL:(031)917-8351~3/FAX:(031)917-8355/E-mail:ujin001@ujin-led.co.kr
**Overseas Factory:** SS-5 Bldg , Export Processing Zone, Chittagong, Bangladesh / TEL:(031)740050/FAX:(031)740038/E-mail:ujinbd@spnetctg.com

**Unit : mm**
**Tolerance : ±0.2**

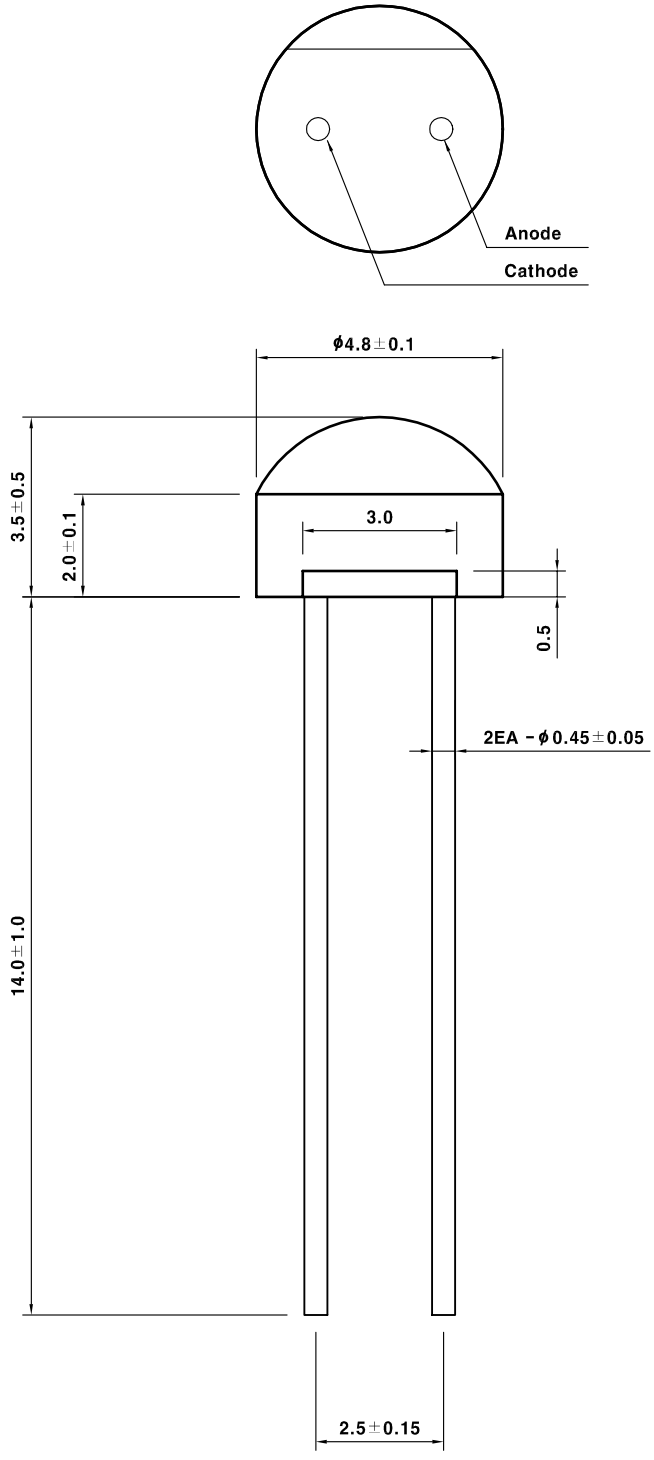


U-JIN U-JIN U-JIN U-JIN U-JIN U-JIN U-JIN U-JIN U-JIN U-JIN U-JIN U-JIN U-JIN U-JIN