U-JIN®

Head Office :
504 Hanaro Plaza, 2033 Daehwa-Dong, Ilsan-Ku, Koyang-Si, Kyungki-Do, Korea/TEL:(031)917-8351~3/FAX:(031)917-8355/E-mail:ujin001@ujinl-led.co.kr
Overseas Factory: Plot#61, Sector#7, Export Processing Zone, Chitagong, Bangladesh / TEL:(31)740050/FAX:(31)740038/E-mail:ujinbd@spnetctg.com

■ Outline Dimensions

Unit :mm
Tolerance : ±0.25

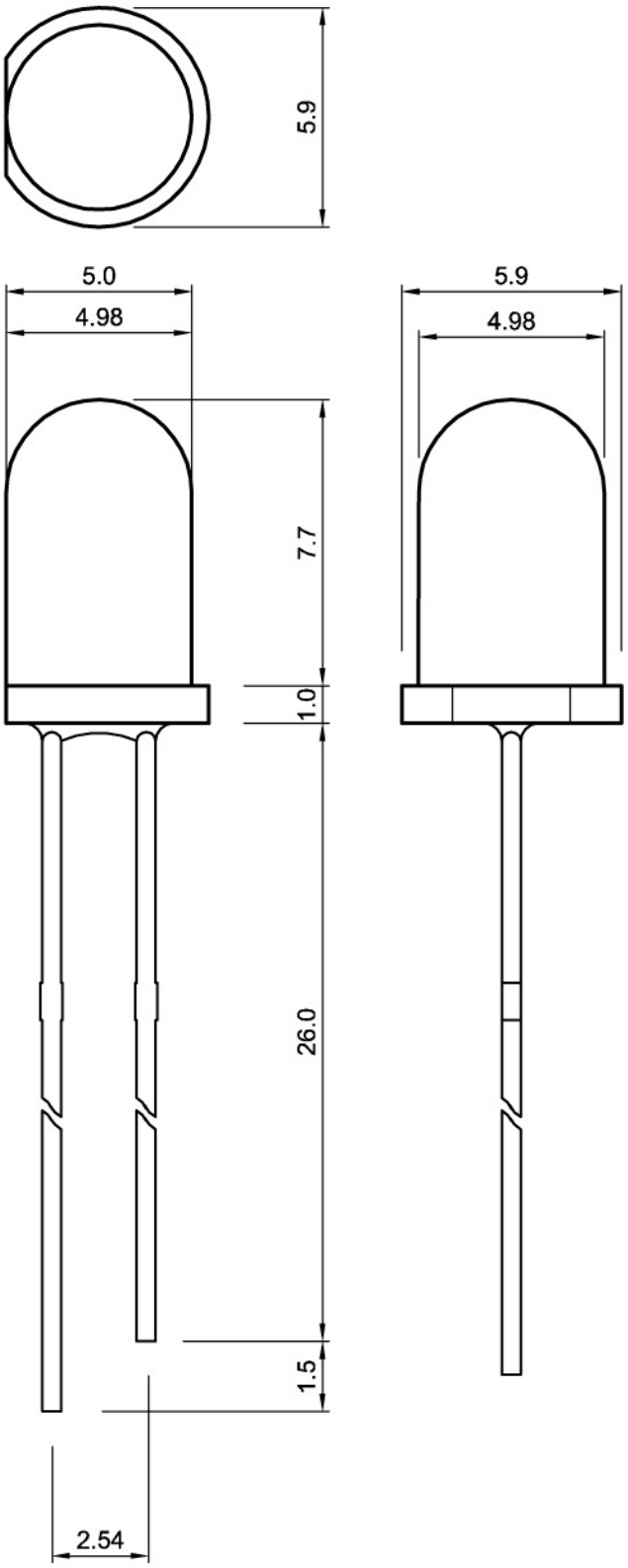

U-JIN U-JIN U-JIN U-JIN U-JIN U-JIN U-JIN U-JIN U-JIN U-JIN U-JIN U-JIN U-JIN U-JIN